ARTWORK FOR APPROVAL

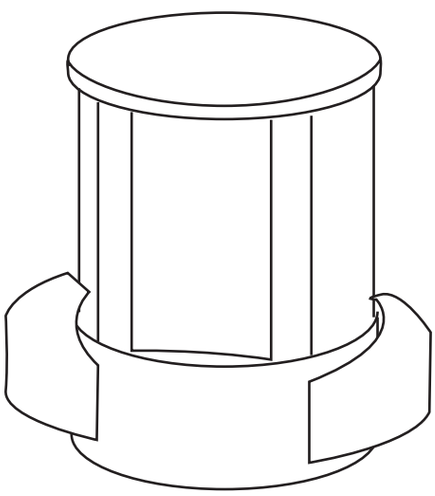

artwork not to scale

please confirm product code, color, print color, quantity and any accessories with this order
it's your responsibility to ensure all the details correct before sign.

ALL ARTWORKS HAVE TO BE APPROVED IN 36 HOURS WHEN RECEIVING.
PRODUCTION WILL NOT COMMENCE WITHOUT SAMPLE OPTION SELECTED.

PEHB02

Maximum Print Area(s):

Item Size :

ORIENT COLLECTION

Order No: 80214 Qty:

Actual Print Size:

Item Color:

Print PMS Color(s):

Samples Options:

☐ Physical sample needed.
(Extra 1 weeks and AU$65.00 cost)

CONDITION: Pre-production sample will be made only if it's neccessary.The decision is made by factory according to the artwork.

ETA for normal quantity : 1. for usbs, coffee cups: 2-3weeks
2. for bags: 7-10weeks (indent, sea freight)
3.other indent jobs: sea freight: 8weeks+
4. air freight: around 4-6 weeks

Artwork Approval:

☐ Approved ☐ Alterations as marked

Name: Signed:

Company: Date: